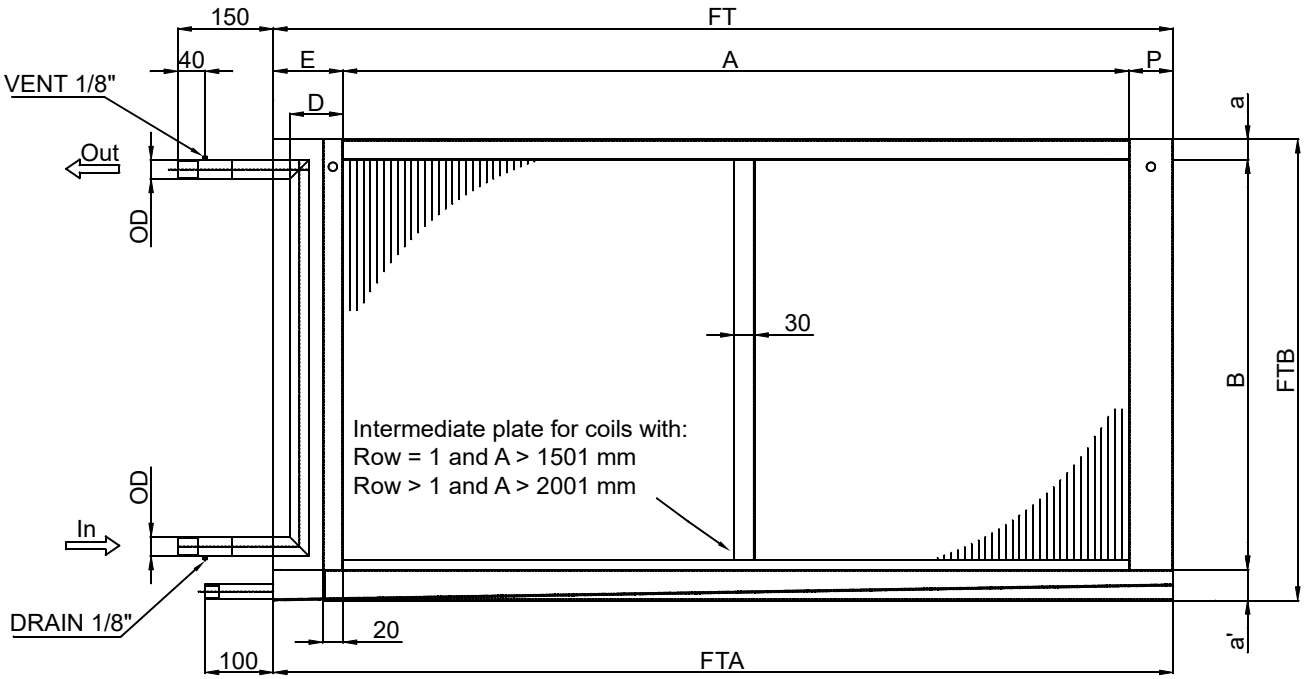

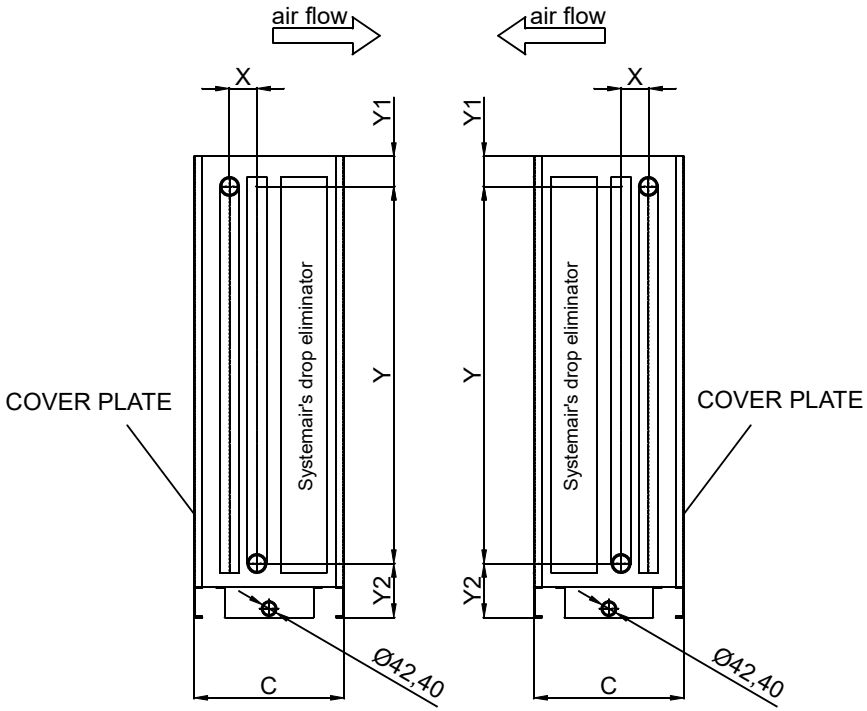

D	
DN15	90
DN20	95
DN25	100
DN32	110
DN40	115
DN50	125
DN65	140
DN80	155
DN100	173
DN125	220

GX	a	a'	P	FTA	FTB	A	B	C
35	45	45	95	3342	1640	2900	1520	STD + 80
38	45	45	95	3342	1940	2900	1840	STD + 80
41	45	45	95	3942	1940	3500	1840	STD + 80
44	45	45	95	3942	2240	3500	2120	STD + 80

NOTES:

- Lifting holes ø12.8
- Drip tray in INOX304
- A = is always in according with order
- B = numer of tubes * (P40 = 40) + 10
- FTA = FT + 10
- Y1 = a + (OD / 2) - 5
- Y2 = (a'+10) + (OD / 2) -5

C = 80mm for systemair's droplet eliminator

N.	DESCRIPTION	THICKNESS	MATERIAL	NOTES
8				
7				
6				
5	CONNECTIONS		ASME SA106M Gr.B	
4	HEADERS		Cu-DHP EN 12735-1	
3	FRAME	DBM Std.	FeZn-DX51D+Z 275 EN10346	
2	FINS	0.11	Al-Alloy 8006	
1	EXCHANGE TUBES	0.40	Cu-DHP EN 12735-2	

MATERIALS AND THICKNESS

REV.	DESCRIPTION	PREP'D	CHK'D	APPR'D	DATE
4	FIFTH UPTADE	ML	AP	ML	16/05/22
3	FOURTH UPTADE	ML	AP	ML	11/05/22
2	THIRD UPTADE	ML	AP	EM	08/03/22
1	UPTADE FOR GX 35;38;41;44	ML	AP	EM	22/12/21
0	FIRST ISSUE	MG	LP	MG	01/07/21

OPERATING CONDITION		
TUBE SIDE	Pmax	10 barg
	Tmin/Tmax	-10°/100°C
FIN SIDE	Pmax	- barg at -°C
	Tmin/Tmax	-°--°C at - barg
TEST PRESSURE		24 barg
FILE		BIG_SIZE-AHU-COOLING COILS.dwg

GENERAL TOLERANCES
ACCORDING TO
DBM-TOL-N-R00

[mm-A3]

CUSTOMER	SYSTEMAIR A/S
CODE	BIG SIZE - AHU - COOLING COILS
N. PIECES	INTERNAL FLUID
WEIGHT	VOLUME
ORDER N.	SCALE
OFFER N.	DRAWING N. P40
CONFIRMATION N.	AHU-COOLING COILS

IL PRESENTE DISEGNO E' DI PROPRIETA' ESCLUSIVA DELLA DBM S.p.A. ESSO NON PUO' ESSERE USATO, RIPRODOTTO, DISTRIBUITO O ESIBITO SENZA L'ESPRESSO CONSENSO DELLA DBM S.p.A.

THIS DRAWING IS EXCLUSIVE PROPERTY OF DBM S.p.A. IT MUST NOT BE USED, REPRODUCED, DISTRIBUTED OR EXHIBITED WITHOUT EXPRESSED PERMISSION OF DBM S.p.A.

D.B.M. SpA Via U.La Malfa, 10 28040 Varallo Pombia-Novara-ITALY Tel. +39 0321 956794 Fax +39 0321 957266 e-mail: info@dbmcoils.com

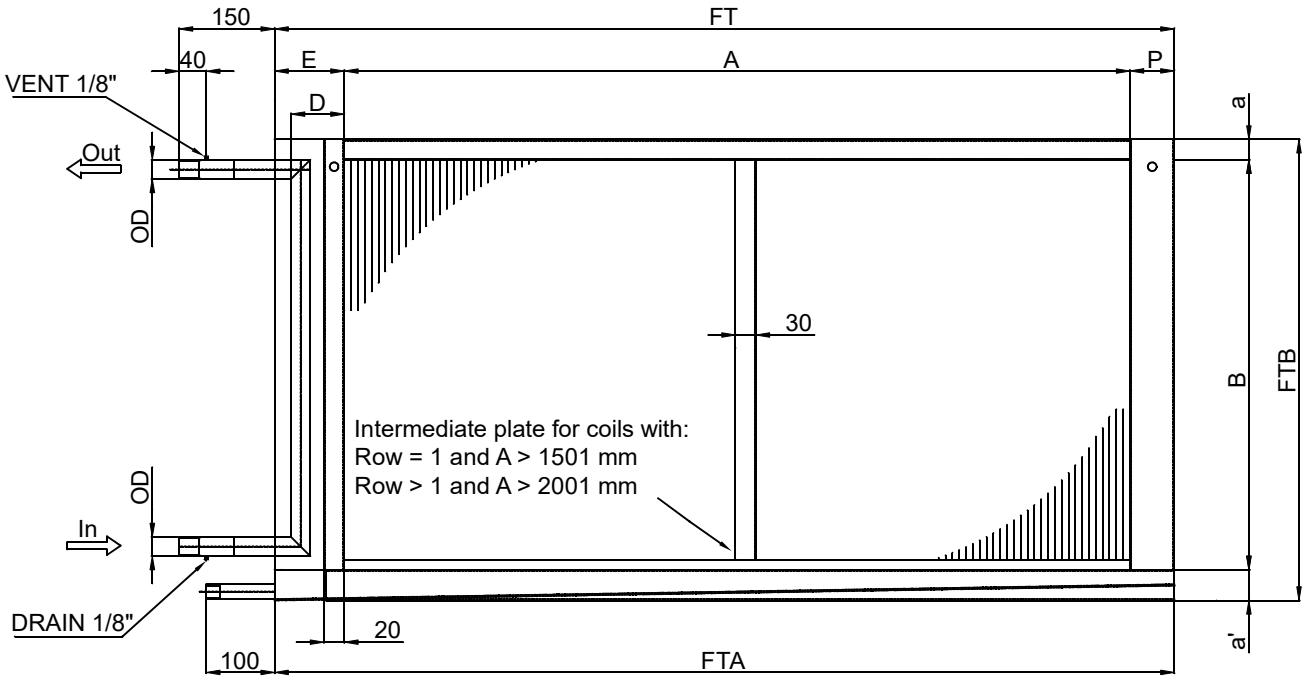

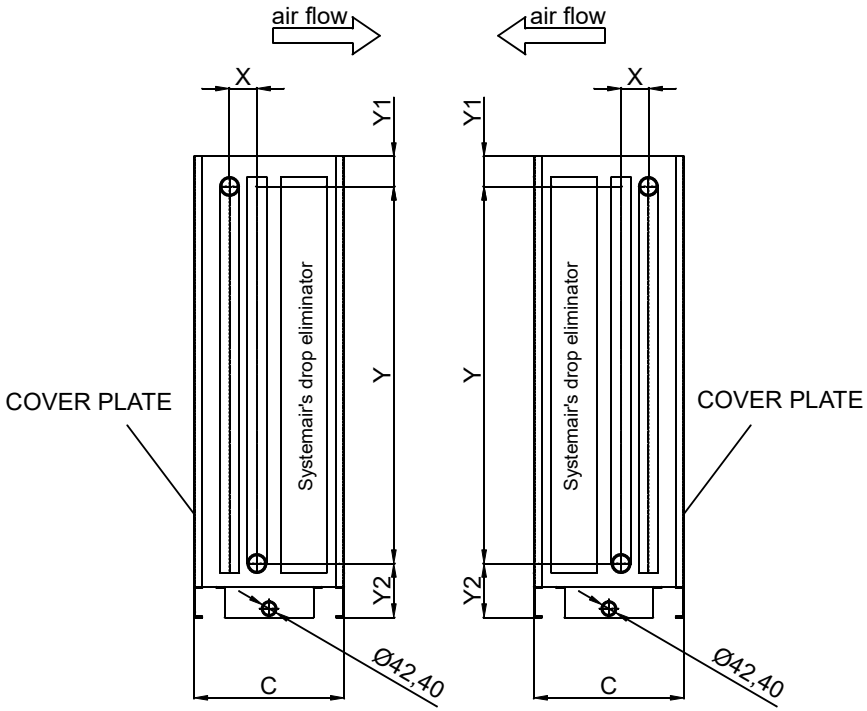

D	
DN15	90
DN20	95
DN25	100
DN32	110
DN40	115
DN50	125
DN65	140
DN80	155
DN100	173
DN125	220

GX	a	a'	P	FTA	FTB	A	B	C
35	45	45	95	3342	1640	2900	1530	STD + 80
38	45	45	95	3342	1940	2900	1830	STD + 80
41	45	45	95	3942	1940	3500	1830	STD + 80
44	45	45	95	3942	2240	3500	2130	STD + 80

NOTES:

- Lifting holes ø12.8
- Drip tray in INOX304
- A = is always in according with order
- B = numer of tubes * (P3012 = 30) + 10
- FTA = FT + 10
- Y1 = a + (OD / 2) - 2,5
- Y2 = (a'+10) + (OD / 2) -2,5
- C = 80mm for systemair's droplet eliminator

N.	DESCRIPTION	THICKNESS	MATERIAL	NOTES
8				
7				
6				
5	CONNECTIONS		ASME SA106M Gr.B	
4	HEADERS		Cu-DHP EN 12735-1	
3	FRAME	DBM Std.	FeZn-DX51D+Z 275 EN10346	
2	FINS	0.11	Al-Alloy 8006	
1	EXCHANGE TUBES	0.35	Cu-DHP EN 12735-2	

MATERIALS AND THICKNESS

REV.	DESCRIPTION	PREP'D	CHK'D	APPR'D	DATE
4	FIFTH UPTADE	ML	AP	ML	16/05/22
3	FOURTH UPTADE	ML	AP	ML	11/05/22
2	THIRD UPTADE	ML	AP	EM	08/03/22
1	UPTADE FOR GX 35;38;41;44	ML	AP	EM	22/12/21
0	FIRST ISSUE	MG	LP	MG	01/07/21

OPERATING CONDITION		
TUBE SIDE	Pmax	10 barg
	Tmin/Tmax	-10°/100°C
FIN SIDE	Pmax	- barg at -°C
	Tmin/Tmax	-°--°C at - barg
TEST PRESSURE		24 barg
FILE		BIG_SIZE-AHU-COOLING COILS.dwg

GENERAL TOLERANCES
ACCORDING TO
DBM-TOL-N-R00

[mm-A3]

IL PRESENTE DISEGNO E' DI PROPRIETA' ESCLUSIVA DELLA DBM S.p.A. ESSO NON PUO' ESSERE USATO, RIPRODOTTO, DISTRIBUITO O ESIBITO SENZA L'ESPRESSO CONSENSO DELLA DBM S.p.A.

THIS DRAWING IS EXCLUSIVE PROPERTY OF DBM S.p.A. IT MUST NOT BE USED, REPRODUCED, DISTRIBUTED OR EXHIBITED WITHOUT EXPRESSED PERMISSION OF DBM S.p.A.

D.B.M. SpA Via U.La Malfa, 10 28040 Varallo Pombia-Novara-ITALY Tel. +39 0321 956794 Fax +39 0321 957266 e-mail: info@dbmcoils.com

CUSTOMER	SYSTEMAIR A/S
CODE	BIG SIZE - AHU - COOLING COILS
N. PIECES	INTERNAL FLUID
WEIGHT	VOLUME
ORDER N.	SCALE
OFFER N.	DRAWING N. P3012
CONFIRMATION N.	AHU-COOLING COILS

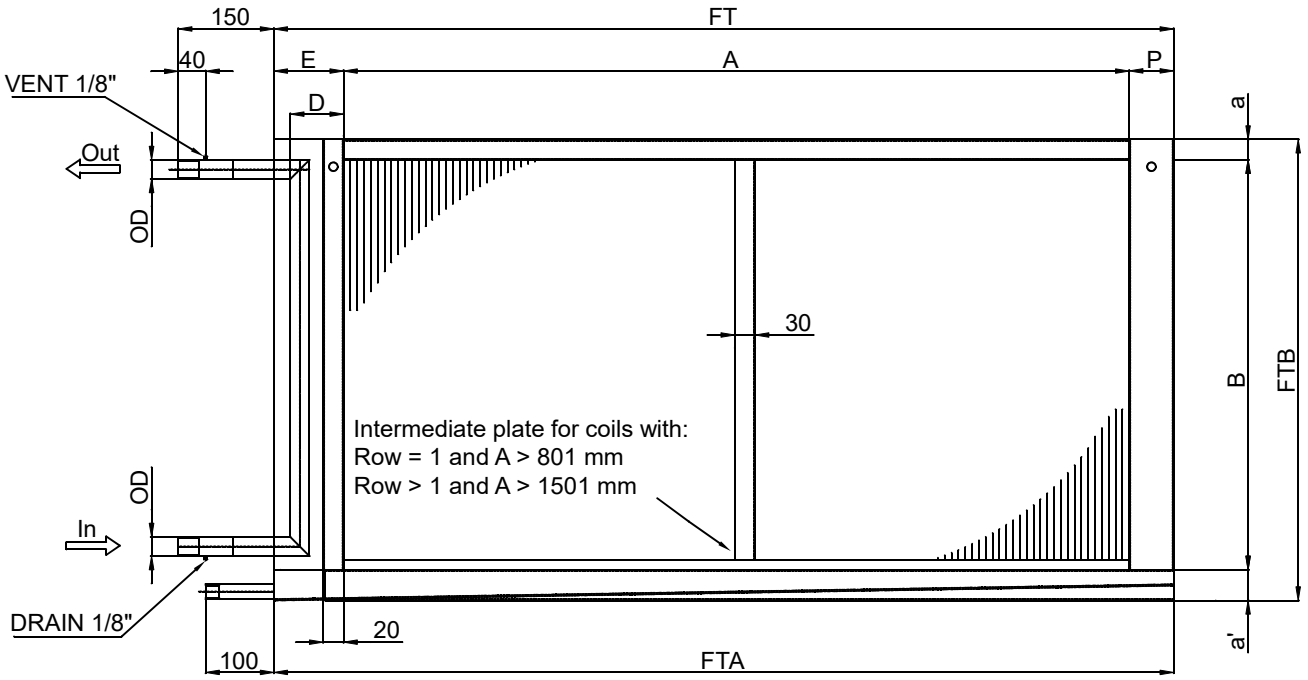

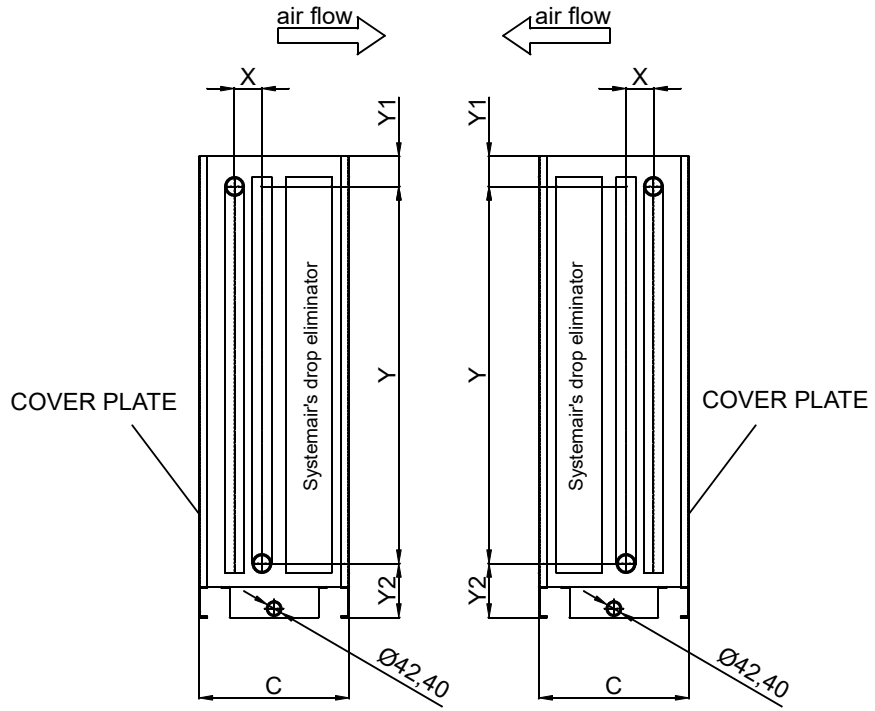

D	
DN15	90
DN20	95
DN25	100
DN32	110
DN40	115
DN50	125
DN65	140
DN80	155
DN100	173
DN125	220

GX	a	a'	P	FTA	FTB	A	B	C
35	45	45	95	3342	1640	2900	1550	STD + 80
38	45	45	95	3342	1940	2900	1850	STD + 80
41	45	45	95	3942	1940	3500	1850	STD + 80
44	45	45	95	3942	2240	3500	2150	STD + 80

NOTES:

- Lifting holes ø12.8
- Drip tray in INOX304
- A = is always in according with order
- B = numer of tubes * (P25 = 25) + 10
- FTA = FT + 10
- Y1 = a + (OD / 2) - 1
- Y2 = (a'+10) + (OD / 2) - 1
- C = 80mm included for systemair's droplet eliminator

.

N.	DESCRIPTION	THICKNESS	MATERIAL	NOTES
8				
7				
6				
5	CONNECTIONS		ASME SA106M Gr.B	
4	HEADERS		Cu-DHP EN 12735-1	
3	FRAME	DBM Std.	FeZn-DX51D+Z 275 EN10346	
2	FINS	0.10	Al-Alloy 8006	
1	EXCHANGE TUBES	0.30	Cu-DHP EN 12735-2	

MATERIALS AND THICKNESS

REV.	DESCRIPTION	PREP'D	CHK'D	APPR'D	DATE
4	FIFTH UPTADE	ML	AP	ML	16/05/22
3	FOURTH UPTADE	ML	AP	ML	11/05/22
2	THIRD UPTADE	ML	AP	EM	08/03/22
1	UPTADE FOR GX 35;38;41;44	ML	AP	EM	22/12/21
0	FIRST ISSUE	MG	LP	MG	01/07/21

OPERATING CONDITION		
TUBE SIDE	Pmax	10 barg
	Tmin/Tmax	-10°/100°C
FIN SIDE	Pmax	- barg at -°C
	Tmin/Tmax	-°--°C at - barg
TEST PRESSURE		24 barg
FILE		BIG_SIZE-AHU-COOLING COILS.dwg

GENERAL TOLERANCES
ACCORDING TO
DBM-TOL-N-R00

[mm-A3]

IL PRESENTE DISEGNO E' DI PROPRIETA' ESCLUSIVA DELLA DBM S.p.A. ESSO NON PUO' ESSERE USATO, RIPRODOTTO, DISTRIBUITO O ESIBITO SENZA L'ESPRESSO CONSENSO DELLA DBM S.p.A.

THIS DRAWING IS EXCLUSIVE PROPERTY OF DBM S.p.A. IT MUST NOT BE USED, REPRODUCED, DISTRIBUTED OR EXHIBITED WITHOUT EXPRESSED PERMISSION OF DBM S.p.A.

D.B.M. SpA Via U.La Malfa, 10 28040 Varallo Pombia-Novara-ITALY Tel. +39 0321 956794 Fax +39 0321 957266 e-mail: info@dbmcoils.com

CUSTOMER	SYSTEMAIR A/S
CODE	BIG SIZE - AHU - COOLING COILS
N. PIECES	INTERNAL FLUID
WEIGHT	VOLUME
ORDER N.	SCALE
OFFER N.	DRAWING N. P25
CONFIRMATION N.	AHU-COOLING COILS